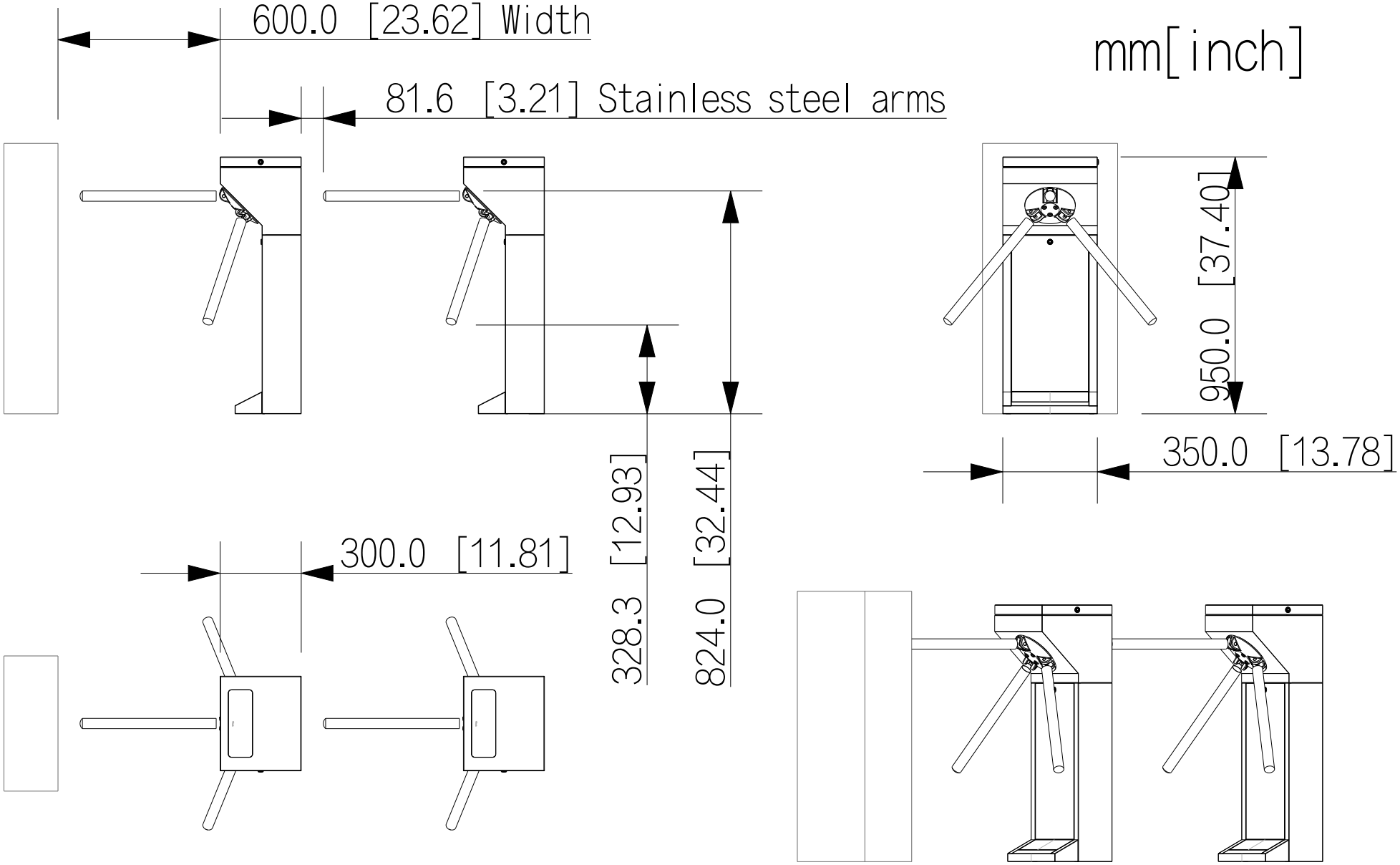
600.0 [23.62] Width
mm[inch]
81.6 [3.21] Stainless steel arms
950.0 [37.40]
350.0 [13.78]
328.3 [12.93]
824.0 [32.44]
300.0 [11.81]